NOTE:
ORDER DOORS BY CLEAR OPENING DIMENSIONS REQUIRED

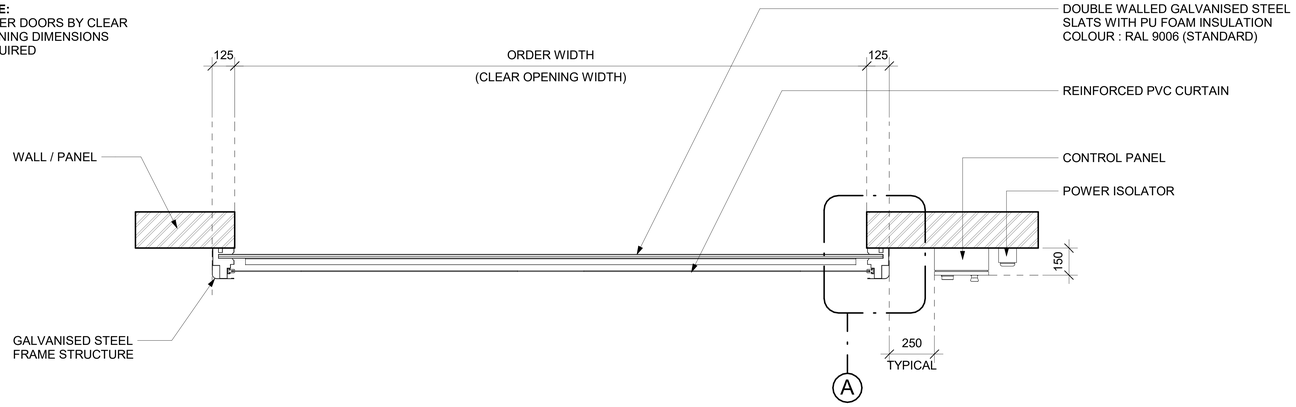

1 - **FLOOR PLAN VIEW**

SCALE: 1:12 MTS.

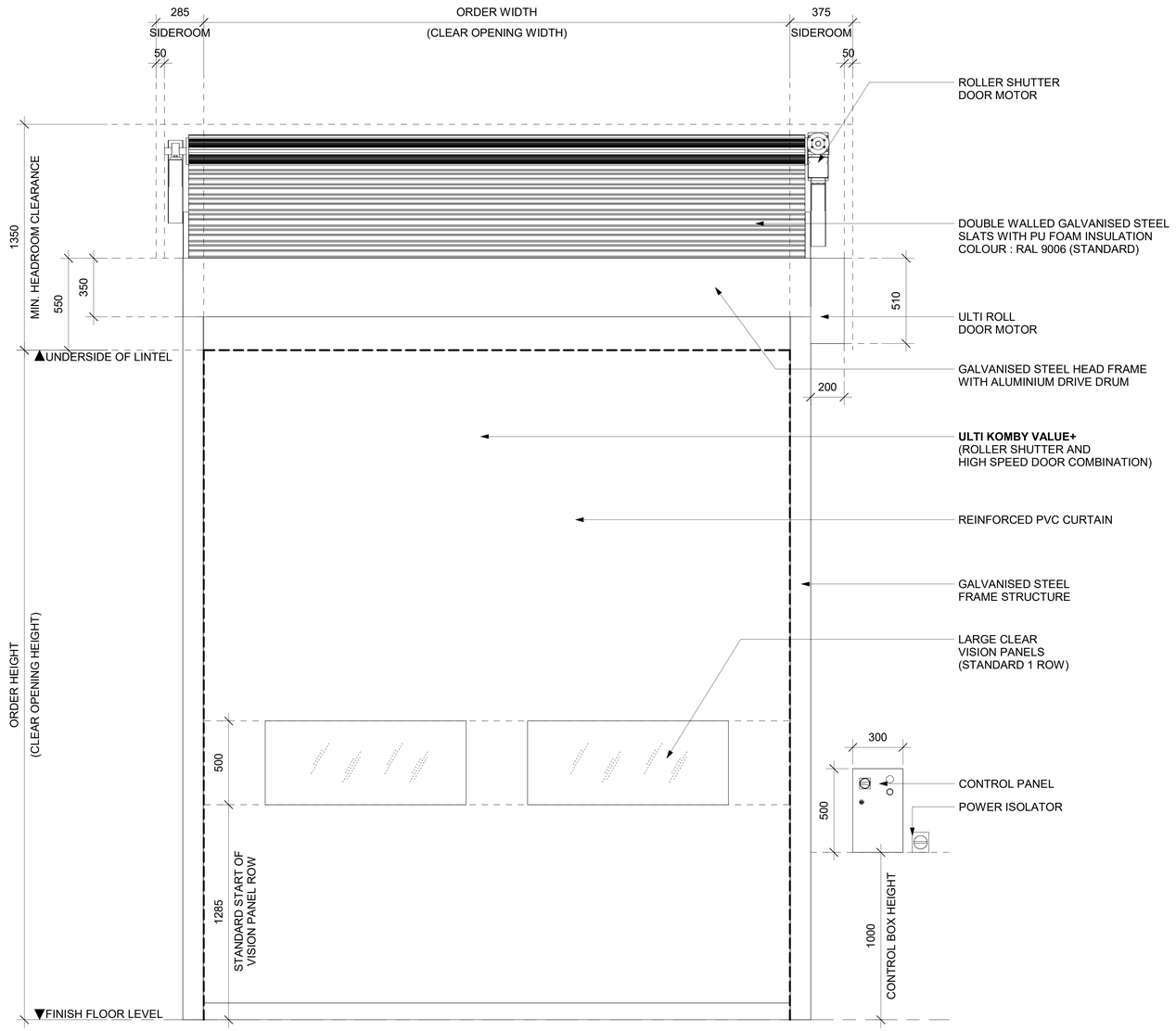

'INSIDE VIEW - MOUNTED SIDE'

2 - **FRONT ELEVATION VIEW**

SCALE: 1:12 MTS.

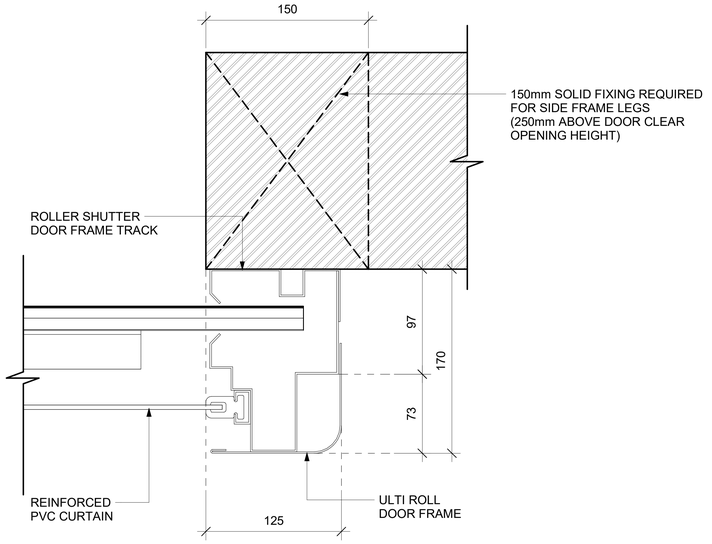

3 - **DETAIL 'A' PLAN VIEW**

SCALE: 1:2 MTS.

4 - **3D VIEW**

SCALE: N.T.S.

ulti group

© Ulti Group Ltd, 2020

NOTE:

CONTACT ULTI GROUP FOR ANY CUSTOMISATIONS AND TO DISCUSS PROJECT SPECIFIC INFORMATION

www.ultigroup.co.nz
hello@ultigroup.co.nz
Phone: 0800 807 753
105 Glover Road, Hawera, 4610

SPECIFICATIONS :

RELEASED VERSION NO. :	**VERSION 1**
PRODUCT GROUP :	**HIGH SPEED DOORS**
PRODUCT ID :	**00000**
APPLICATION :	**INTERNAL & EXTERNAL**
STANDARD SIZE :	**3500 mm WIDE x 4000 mm HIGH**
MINIMUM SIZE :	**2000 mm WIDE x 2000 mm HIGH**
MAXIMUM SIZE :	**6000 mm WIDE x 5400 mm HIGH (MAXIMUM 25 m²)**
HEADROOM :	**1350 mm**
SIDE ROOM - MOTOR SIDE :	**375 mm**
SIDE ROOM - NON MOTOR SIDE :	**285 mm**
STANDARD FRAME MATERIAL :	**GALVANISED STEEL**
STANDARD FRAME COLOUR :	**RAL 9010 - WHITE**
STANDARD CURTAIN MATERIAL :	**REINFORCED PVC CURTAIN**
CURTAIN COLOUR (INSIDE / OUTSIDE) :	**RAL 6018 - STANDARD**
VISION PANELS :	**1 ROW (STANDARD)**
POWER SUPPLY :	**3 PHASE, 400V + NEUTRAL + EARTH 15 Amp**

TITLE:

ULTI KOMBY VALUE+

(ROLLER SHUTTER & HIGH SPEED DOOR COMBINATION)

SHEET NO. :	DATE :
1 OF 1	OCT. 23, 2020

DRAWING NUMBER :

ULTIKOMBY-VALUE+-001

APPROVED BY :			J.PRESTIDGE
DRAWN BY :			J.ENRIQUEZ
SCALE :	As indicated	**SHT. SIZE :**	A0

*All dimensions are in millimeters unless otherwise specified